Product number: IN-2087

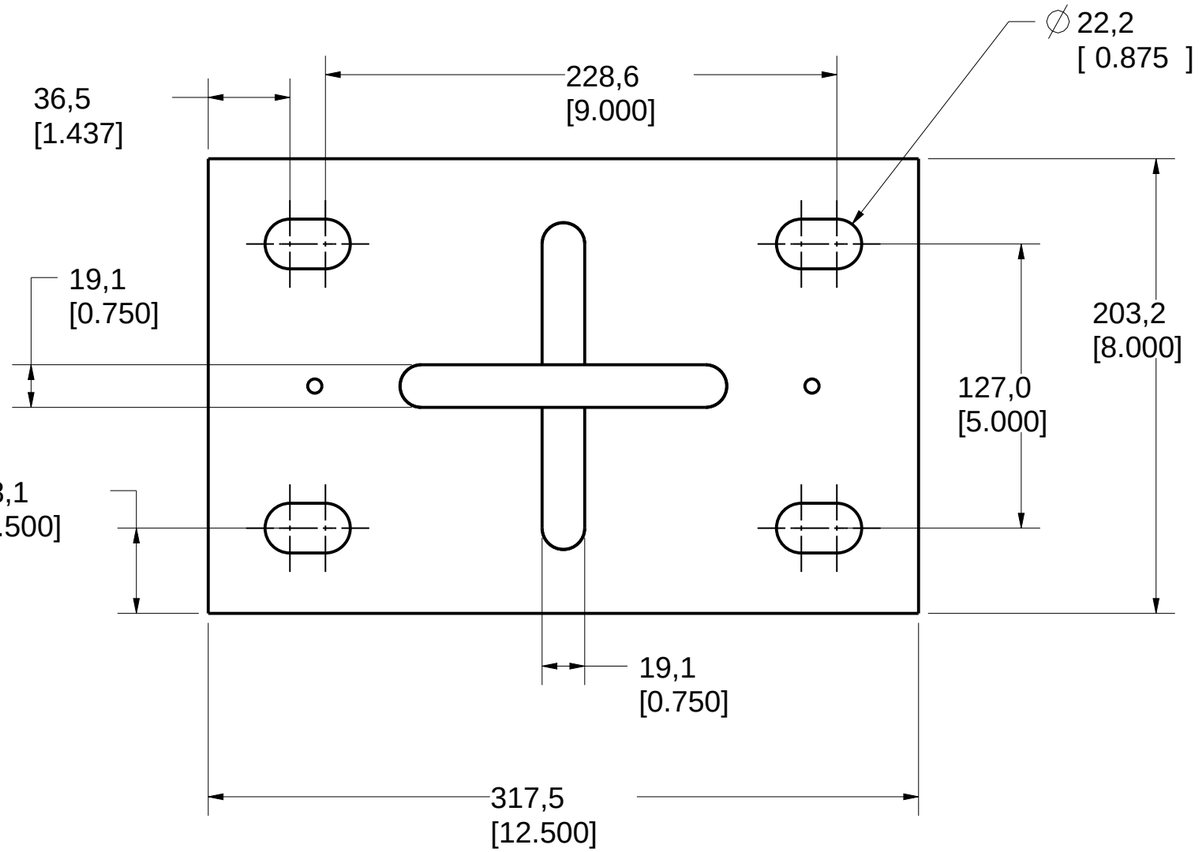

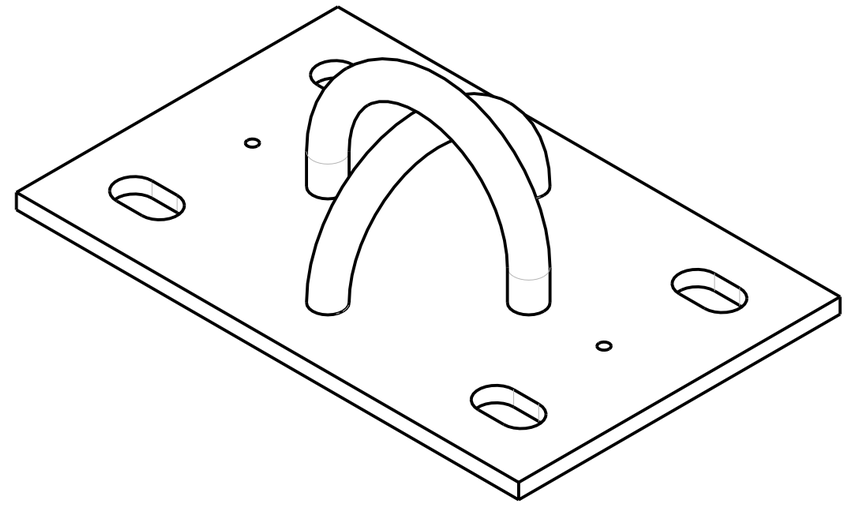

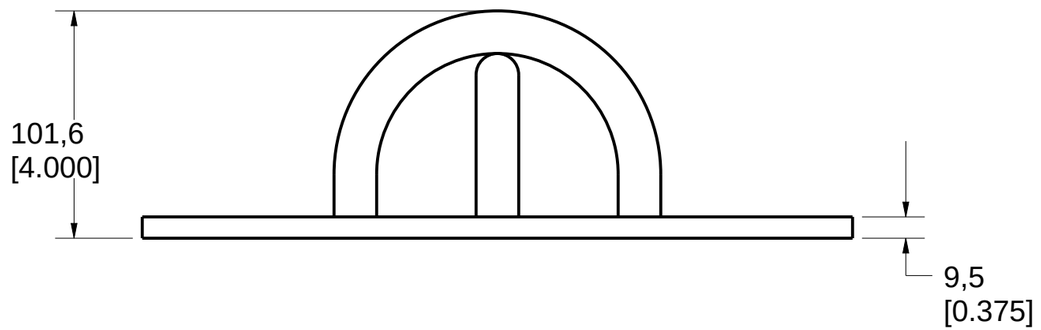

PAT. NO.:	©2006/12/07	©

PRODUITS DE SERVICE PUBLICS INNOVA INC.
INNOVA PUBLIC UTILITY PRODUCTS INC.

© 9105-0732 QUEBEC INC. and under exclusive license to INNOVA PUBLIC UTILITY PRODUCTS INC., (hereafter « INNOVA »). All rights reserved. Protected under the Copyright Act of Canada and international treaties and agreements regarding copyrights. Violators are subject to prosecution and other legal recourses for infringement. Any reproduction, adaptation or other use or disclosure whatsoever, in totality or in part, and in any form or by any means whatsoever, strictly forbidden and requires the prior written approval of INNOVA. All data is the exclusive property of 9105-0732 QUEBEC INC. and under exclusive license to INNOVA and cannot be used nor disclosed in any way either without the prior written approval of INNOVA».

WEIGHT:	TITLE:		
13 Lb 6 Kg	76mm (3") Universal Ring Adapter (SS 304)		
COLOR:	MATERIAL: Stainless	SHEET(S): 1 / 3	PROJECT: IN-2087

IN-2087 Ring Adapter installation Requirements

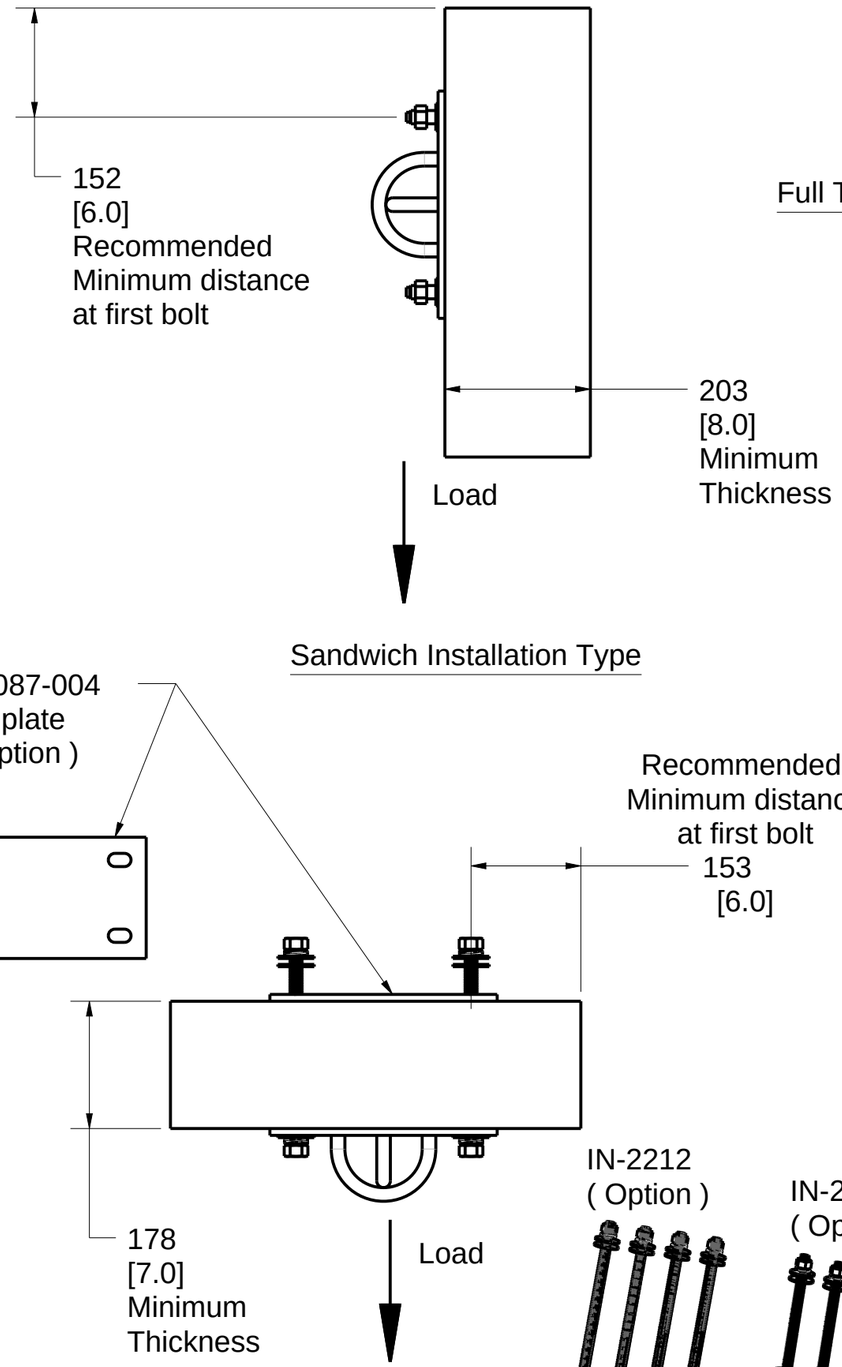

Full Thickness Installation

Recommendations:

Concrete must be made of 0,2%
gross area rebar reinforced
13.8 MPa (2000psi) or better.
Minimum thickness of 203mm (8")
OR
Non reinforced Concrete
18.3MPa (2000psi) or better
Minimum thickness of 286mm (11-1/4").

Moment capacity:
13,558 N-m (120,000 lbf-in)
Vertical load:22,241 N (5,000 lbf).
Note: It is the responsibility
of the field engineer
to assure installation compliance.

Hardware:

Anchor bolts: Chemical setting 3/4" x 6-5/8"
effective holding length and made of 304/316
stainless steel
Max pulling strength:75,620 N (17,000 lbf).
To be installed with 3/4" stainless
steel nuts and washers.

Sandwich Installation Type

IN-2212
(Option)

IN-2174
(Option)

Recommendations:

Concrete must be made of 0,2%
gross area rebar reinforced
13.8 MPa (2000psi) or better.
Minimum thickness of 178mm (7")
OR
Non reinforced Concrete
18.3MPa (2000psi) or better
Minimum thickness of 286mm (11-1/4").

Moment capacity:
13,558 N-m (120,000 lbf-in).
Vertical load: 22,241 N (5,000 lbf).
Note: It is the responsibility
of the field engineer
to assure installation compliance.

Hardware:

Anchor rods: 3/4" x 12" or 16"
and made of 304/316 stainless steel.
To be installed with 3/4" stainless
steel nuts and washers.

Product number: IN-2087

PAT. NO.:	©2006/12/07	©

PRODUITS DE SERVICE PUBLICS INNOVA INC.
INNOVA PUBLIC UTILITY PRODUCTS INC.

© 9105-0732 QUEBEC INC. and under exclusive license to INNOVA PUBLIC UTILITY PRODUCTS INC., (hereafter « INNOVA »). All rights reserved. Protected under the Copyright Act of Canada and international treaties and agreements regarding copyrights. Violators are subject to prosecution and other legal recourses for infringement. Any reproduction, adaptation or other use or disclosure whatsoever, in totality or in part, and in any form or by any means whatsoever, strictly forbidden and requires the prior written approval of INNOVA. All data is the exclusive property of 9105-0732 QUEBEC INC. and under exclusive license to INNOVA and cannot be used nor disclosed in any way either without the prior written approval of INNOVA».

WEIGHT: 13 Lb 6 Kg	TITLE: 76mm (3") Universal Ring Adapter (SS 304)		
COLOR:	MATERIAL: Stainless	SHEET(S): 2 / 3	PROJECT: IN-2087

Product number: IN-2087

SPECIFICATIONS

This equipment is considered as part of a personal fall arrest system (PFAS) with a maximum working capacity of 164 Kg (360 lb).

It is only to be used in conjunction with a personal fall arrest system that limits the maximum arrest force (MAF).

Maximum working load : 360 lbf (1614 N)
Maximum conception load : 5000 lbf (22,241 N)

STANDARDS

Meets the following standards:
OSHA Personal fall arrest system - 1910.66 App C
ANSI Safety requirements for personal fall arrest system, subsystems and components Z359.1 (R1999) / 2007
CAN/CSA Fall arresters, vertical lifelines, and rails Z259.2.1-98
CE EN 795:2012 Type A

MATERIAL AND CONSTRUCTION

Plate and hooks : 304 Stainless Steel
Welding Certification : CSA W59 & W47.1,AWS D1.6

RESTRICTIONS

IMPORTANT :

Adaptors are designed to function only with Innova Public Utility Products inc. equipment.

Anchorage hardware must be installed by qualified and experienced personnel. The installer must follow the anchorage hardware manufaturers recommendations at all times.

Periodic inspections of hardware must be done.
In the occurrence of a fall or the safety of the equipment is in doubt, equipment must be immediately removed from service and inspected by qualified personnel before reuse.

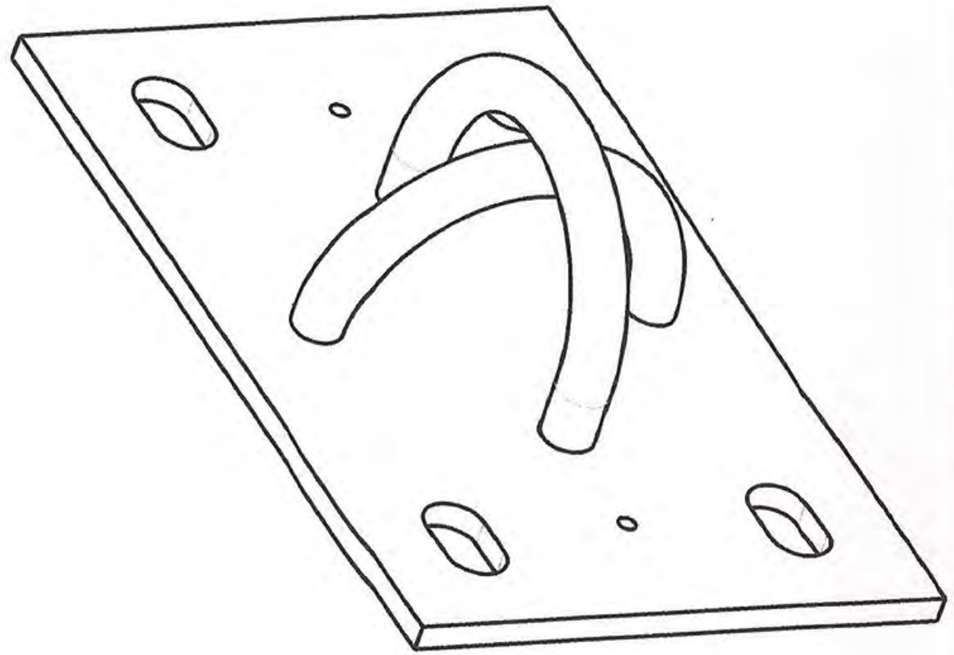

INGÉNIEUR · ENGINEER
Michael Parker
24/02/16
102051
QUÉBEC
Stamping space

PAT. NO.:	©2006/12/07	©	

PRODUITS DE SERVICE PUBLICS INNOVA INC.
INNOVA PUBLIC UTILITY PRODUCTS INC.

© 9105-0732 QUEBEC INC. and under exclusive license to INNOVA PUBLIC UTILITY PRODUCTS INC., (hereafter « INNOVA »). All rights reserved. Protected under the Copyright Act of Canada and international treaties and agreements regarding copyrights. Violators are subject to prosecution and other legal resources for infringement. Any reproduction, adaptation or other use or disclosure whatsoever, in totality or in part, and in any form or by any means whatsoever, strictly forbidden and requires the prior written approval of INNOVA. All data is the exclusive property of 9105-0732 QUEBEC INC. and under exclusive license to INNOVA and cannot be used nor disclosed in any way either without the prior written approval of INNOVA.

WEIGHT:	TITLE:		
13 Lb 6 Kg	**76mm (3") Universal Ring Adapter (SS 304)**		
COLOR:	MATERIAL: Stainless	SHEET(S): 3 / 3	PROJECT: IN-2087