XTIRPA

INSTRUCTION AND SAFETY MANUAL
XTIRPA™ POLE HOIST SYSTEM

UNIVERSAL RESCUE SYSTEM
IN-8008

XTIRPA ™

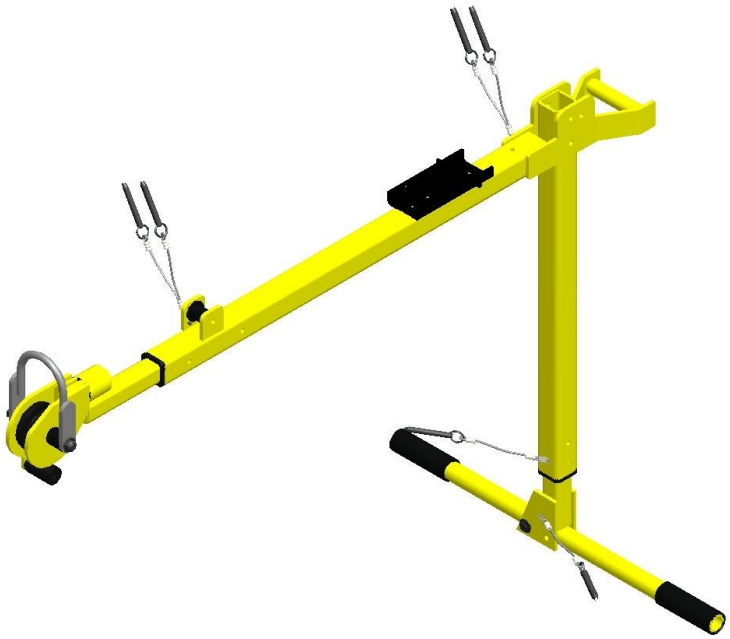

Innova
Produits de Services Publics - Public Utility Products inc.

TO BE READ AND UNDERSTOOD BY USER PRIOR TO EACH USE

INNOVA Public Utility Products Inc.., 1040 BOUL. INDUSTRIEL, GRANBY, QUEBEC, CANADA
Tel (450) 777-1240 Fax (450) 372-9936 **www.xtirpa.ca**

Numéro: **MU8008-002ANG Rev2 2016**

INTRODUCTION

WARNING

The XTIRPA™ **System is part of a personal protection equipment system for fall protection, work positioning, or rescue,** for use in confined spaces.

The user must read, understand and follow the Manufacturer's instructions for each component or part of the complete **XTIRPA™** System. These instructions must be provided to the user of the **XTIRPA™** System. The user must read and understand these instructions before using the **XTIRPA™** System. The manufacturer's instructions must be followed for proper use and maintenance of this product. Alterations or misuse of the **XTIRPA™** System or of any component or part thereof or failure to follow instructions may result in serious injury or death, for which the manufacturer disclaims all warranties and liabilities whatsoever, user, owner and purchaser of the **XTIRPA™** System waiving all claims, rights and recourses against the manufacturer and derived therefrom.

The **XTIRPA ™** System was designed for persons needing a personal protection equipment system for fall protection, work positioning, or rescue, for use in confined spaces. The **XTIRPA™** System is intended to act as a support structure or anchor for these uses. Due to its design and the use of an advanced composite, the **XTIRPA™** System is one of the lightest and most ergonomic systems of its kind on the market. The **XTIRPA™** System is in compliance with ANSI, OSHA, CSST and CE standards. The equipment has been tested in accordance with applicable requirements of the standard EN 795:2012 Type A.

IMPORTANT: The buyer must complete and return the limited warranty registration form.

Always keep this instruction and safety manual available to any worker needing to use the **XTIRPA™** System. Before each use, the user must read, understand and follow the manufacturer's instruction and safety manual.

Keep instructional and safety labels affixed to the **XTIRPA™** System and its components and parts clean and legible at all times. Clean or replace if required. New labels can be obtained upon demand.

Establish a regular training program on the **XTIRPA™** System for new & experienced workers, as further recommended in this instruction and safety manual. Establish a detailed inspection program for the **XTIRPA™** System and document findings, as further recommended in this instruction and safety manual. Always inspect the **XTIRPA™** System before each use and at least once a year.

The **XTIRPA™** System and its components and parts have labels indicating the maximum capacity of each. Exceeding said maximum capacity may result not only in damages to the **XTIRPA™** System or its components or parts but also in serious injury or death, for which the manufacturer disclaims all warranties and liabilities whatsoever, user, owner and purchaser of the **XTIRPA™** System waiving all claims, rights and recourses against the manufacturer derived therefrom.

The **XTIRPA™** Universal Safety system, IN-8008 including components IN-2337 / IN-2338 Pole Hoist, IN-2127 T-Bar, and IN-2256/IN-2274 Ajustable T-Bars, conforms to document number MU8008-002ANG Rev2 2016.

APAVE SUDEUROPE SAS (Headquarters: 8 rue Jean-Jacques Vernazza—Z.A.C. Saumaty-Séon - CS 60193 - 13322 MARSEILLE CEDEX 16) is the notified body involved in the initial production and certification control phase.

DESCRIPTION & INTERPRETATION OF MARKING SYMBOLS

This symbol is used to alert the user to a potential hazard. The safety of the worker is in jeopardy. It is imperative to follow the manufacturer's recommendations.

This symbol asks the user to read and understand the manual for this product before use.

This symbol specifies that the system should be used by a single user.

-1-
APPLICATION

The **XTIRPA™** System, and its many components and parts (including davit arm, manhole guard, detachable adapter, permanent adapter, integrated mast, trailer hitch mount, pole hoist and 5 piece hoist system), are intended to be used as part of a personal protection equipment system for fall protection, work positioning, personnel handling, materials handling, or rescue, for use in confined spaces. The **XTIRPA™** System is intended to act as a support structure or anchor for these uses.

-2-
RESTRICTIONS

a) CAPACITY: The maximum working load for this product is 360 lbs (164 kg).
According to (ANSI, OSHA, CSA).

According to **EC** (EN 795: 2012), use an EN-360 and/or EN-363 fall protection system or an EN-1496 recovery system.

b) The manufacturer attests that anchoring devices have been tested accordingly to the current European standard (EN 795:2012 Type A) and, except otherwise stipulated, they are to be used by a single person using a shock absorber in accordance with regulation EN 355.

c) PRECAUTIONS: Take the necessary precautions to limit injuries to the user and risks of damaging the **XTIRPA™** System.

d) Use of the **XTIRPA™** System in areas where environmental hazards exist may require additional precautions to limit the possibility of injury to the user or damage to the **XTIRPA™** System. Hazards may include, but are not limited to: high heat, fire, flame, smoke, fumes, caustic chemicals, corrosive environments, high voltage power lines, sudden changes of pressure, explosive or toxic gases or substances, water or risks of flooding, risks of wall, ceiling or floor collapsing, moving machinery and sharp edges.

e) Install and secure all signaling and other precautionary and security measures, including but not limited to, notifying users, bystanders and vehicle operators circulating near the **XTIRPA™** System of the presence of the **XTIRPA™** System and its workers, before starting work.

f) Wear all appropriate certified and recommended security equipment such as, but not limited to, hard hat, protective eyewear, leather gloves, protective clothing, work boots, harness in accordance with EN 361, flashlight and respiratory device if needed.

WARNING: Equipment shall not be used past its capacity, or in any other applications for which the equipment was not designed.

WARNING: A warning should specify that the equipment shall not be used by a person that has not been trained or is not competent to use the equipment safely.

g) Always work in teams of at least two (2) people: 1 attendant and 1 confined space worker (the person attached to the lifeline cable or rope). These people must be qualified and trained on the **XTIRPA™** System. They must have read and understood this instruction and safety manual before using the **XTIRPA™** System. One person works in the confined space (the user attached to the lifeline cable or rope) and the other (attendant) pays out the line and reels it in, keeps in contact with the person inside and remains available in case of any emergency. The attendant makes sure, at all times, that the user who is tying his lifeline cable or rope to his EN 361-compliant harness is in the right position. The attendant also assures that the **XTIRPA™** System is well in place and that no load imbalance is possible.

IMPORTANT: During installation of the system, it is important to ensure stability throughout.

h) Use only a certified full body harness in accordance with EN 361 and lifeline cables and ropes for any user of the **XTIRPA™** System, with appropriate specifications designed and recommended for use in specialized work conditions such as those for which the **XTIRPA™** System is intended to be used as per this instruction and safety manual. For the installation of lifeline cables and ropes on the certified 12kn anchor points of the davit arm, see section 6 paragraphs 3 and 5.

IMPORTANT: When used as PPE, the system must be fitted with a device limiting the dynamic forces exerted on the user to a maximum of 6kN (1320 LbF).

i) Plan your work program before starting. Have the required equipment, procedures and people, which must be qualified and trained on the **XTIRPA™** System and who must have read and understood this instruction and safety manual before using the **XTIRPA™** System, available to do the job.

j) Keep all instructional and safety labels affixed on the **XTIRPA™** System and its components and parts clean and legible at all times. Clean or replace if required. New labels can be obtained upon demand.

IMPORTANT: If the markings on the anchoring device are not legible after installation, it is recommended that supplementary markings next to the anchoring device be made.

WARNING: No modifications or additions to the equipment shall be performed without the authorization of the manufacturer, and all repairs shall be done as indicated by the operating procedure of the manufacturer.

WARNING: It is established and agreed that the equipment (system) is reserved for the use of only one person.

k) Do not exceed **360lbs** (164kg) (CSI, ANSI, OSHA) as the maximum work load of the system.

l) Follow all applicable laws, regulations and standards for work, entry and exit in confined spaces.

m) A person who has not read this instruction and safety manual, has not been trained in using the **XTIRPA™** System and does not understand all operation, safety, maintenance, servicing and storage instructions contained in this instruction and safety manual and in any other recommendations provided by the manufacturer or its certified trainers is not qualified to operate the **XTIRPA™** System and does it at their sole risk, therefore waiving any and all claims, rights and recourses against the manufacturer and derived therefrom.

n) Make sure to conform to relative demands regarding anchoring devices (E.g.: floor adapter, wall adapter, etc.) or ensure that the chosen structure that will be used has an anchoring point, and keep in mind minimal required resistance, equivalency and position.

WARNING: Anchoring devices must be installed only by competent persons or organizations.

o) The maximum force that can be applied by the system to the structure is a vertical force of 22kN (5000 lbf) (according to CSA, ANSI, OSHA) or 12kN (according to EN362, EN795 EC) from the anchor when the system is placed.

WARNING: The system must be appropriately checked, for example, by calculations or tests.

WARNING: The use of a base, structural anchor or fastener, if one exists, must be taken into account when calculating the amount of force supported by the anchor during strength and integrity testing.

p) A rescue plan shall be put in place in order to account for all likely emergencies that could occur while working.

WARNING: Any modification or addition to the equipment cannot be done without the prior written consent of the manufacturer, and any repairs must be undertaken in accordance with the manufacturer's procedures.

WARNING: This equipment (system) is reserved for the use of one person at a time.

WARNING: It is important to place the **XTIRPA™** System on a hard and level surface. **Do not use the XTIRPA™ System on a soft surface, including, but not limited to, sand, grass, gravel and rocks.** If you have any questions about use or maintenance or whether the **XTIRPA™** System is appropriate for your job, please contact the Manufacturer PSP INNOVA INC.

WARNING: For safety reasons, make sure when using the anti-drop system that you have enough space under the user, so as to avoid injury. If a fall occurs, there should be enough space to avoid a collision with the ground or any obstacle. See the diagram in Section 8 for calculating this distance.

-3-
XTIRPA™ SYSTEM REQUIREMENTS

IMPORTANT: If you have questions on the use, care or suitability of the **XTIRPA™** System for your application, please contact the manufacturer INNOVA Public Utility Products Inc.

IMPORTANT: Record the product identification information from the ID label in the maintenance and inspection log of this instruction and safety manual.

IMPORTANT: Record purchasing date and also date of first use on the maintenance and inspection log sheet included in this safety instruction manual.

a) The **XTIRPA™** System is intended to be used as part of a personal protection equipment system for fall protection, work positioning, personnel handling, materials handling, or rescue, for use in confined spaces. The **XTIRPA™** System is intended to act as a support structure or anchor for these uses.
The **XTIRPA™** System must be used only with adapters, anchors, connectors (EN 362), and other components, parts or subsystems that have been certified, approved and recommended by the Manufacturer.

WARNING: This system should never be used to transport personas and material at the same time.

b) Substitutions or replacements made with non-approved adapters, anchors, connectors (EN 362), other components, parts or subsystems may be incompatible, may jeopardize the safety and reliability of the complete **XTIRPA™** System and may result in serious injury or death, for which the manufacturer disclaims all warranties and liabilities whatsoever, user, owner and purchaser of the **XTIRPA™** System waiving all claims, rights and recourses against the manufacturer derived therefrom.

c) Connectors (EN 362) (hooks, carabiners, D-rings) must be able to support a weight of at least 5000lbs (2273Kg) (CSA, ANSI, OSHA).

d) Make sure the lifeline cable or rope is positioned directly over the work area. Use only certified lifeline cable or rope, in perfect working condition, with appropriate specifications, including maximum leverage capabilities, for the intended use of the **XTIRPA™** System.

e) Owners must make sure that, before each use, all users of the **XTIRPA™** System have read, understood and follow the manufacturer's instruction and safety manual.

f) Owners must also make sure that all users have successfully been trained in using the **XTIRPA™** System, before allowing them to use the **XTIRPA™** System, and at least annually thereafter.

g) A person who has not read the instruction and safety manual, has not been trained in using the **XTIRPA™** System and does not understand all operation and safety instructions, is not qualified to operate the **XTIRPA™** System. An untrained user exposes himself and others to possible serious injury or death, for which the manufacturer disclaims all warranties and liabilities whatsoever, user, owner and purchaser of the **XTIRPA™** System waiving all claims, rights and recourses against the manufacturer derived therefrom.

h) Refer to and follow applicable ANSI, OSHA, CSA, CE or other standards and local regulations. Comply with all requirements of your local regulations for your applications.

i) See other important operation instructions and safety information hereafter contained in this instruction and safety manual.

j) It is imperative to supply all information in sufficient quantity to assure that different equipment articles are compatible when assembled as a system.

WARNING: It is possible that a hazard may occur while using multiple components, as one of them could affect the safety function of the system, if the safety function of one component can be affected by that of another component.

WARNING: It is essential for the safety of the user, if the product is resold to a destination outside the first country, that the reseller supplies the instruction manual, maintenance instruction log sheet for the periodic inspections and all associated repair instructions written in the native language of the country in which the product will be used. It is also required to supply all specific additional information for the equipment.

WARNING: Any persons with a medical condition which could cause a hazard to the user during normal operation and in emergency situations should avoid using the system.

k) Life expectancy of the **XTIRPA™** System and its components will be determined based on the conclusions of periodic and monthly inspections which will determine whether or not the product may remain in service.

WARNING: If the system has been used to stop a fall, it should not be used again until a competent person has, in writing, authorized its reuse.

WARNING: The safety of the user is in direct relation to the quality of maintenance and integrity of the equipment.

l) When possible, always use a manhole guard in order to secure the work area.

-4-
MAINTENANCE, SERVICING, STORAGE

a) Before each use, the user must read and understand the Manufacturer's Instruction and safety manual. Ensure that the markings are visible at all times.

b) Before each use, carefully inspect the **XTIRPA™** System and all components and parts thereof. Any defective parts or components could result in serious injury or death.

c) ANSI, OSHA, CSA and CE require a regular inspection program for all confined space entry/retrieval equipment and to maintain documented results of these inspections. Use the maintenance and inspection logs included in this instruction and safety manual to document the results.

d) It is recommended that the anchoring device be marked with the most recent or next inspection date.

e) Remove the **XTIRPA™** System from service if a problem or an unsafe or defective condition is found during the inspection. Return to an authorized service center or the manufacturer for service.

f) Replacement components and parts and additional maintenance and servicing procedures must be completed by an authorized service center which has been approved by the manufacturer, or by the manufacturer itself.

g) If the adjustable support legs of the "H" system do not move freely, they must be lubricated with a light machine oil.

h) Establish a monthly inspection which should be done by a competent person (person who is familiar, has been trained and has read and fully understands this instruction and safety manual), other than the user.

WARNING: A periodic inspection should be performed at least once every twelve months.

i) Periodically clean the exterior of the davit arm and base, using water and mild detergent. Clean labels as required.

j) Store the **XTIRPA™** System in a clean and dry environment, out of direct sunlight. Avoid areas with chemical or toxic vapors, substances or environments. Do not immerse or leave in direct contact with water, as corrosion and rust may occur. Inspect the **XTIRPA™** System after any period of extended storage and at least once a month.

k) The **XTIRPA™** System and its components was designed for 10 years of continuous service. The life expectancy of the **XTIRPA™** System and its components will be determined after periodic and monthly inspections that will determine whether or not the product may remain in service.

l) All components and parts of the **XTIRPA™** System should be stored in separate bags to facilitate transport and handling.

WARRANTY

The **XTIRPA™** System offered by the Manufacturer, INNOVA Public Utility Products Inc., is warranted against manufacturing defects in workmanship and materials for a period of two (2) years from the date of shipment of the product, which warranty only covers the original purchaser of the **XTIRPA™** System. The Manufacturer will promptly repair or replace all components or parts found to be defective, the Manufacturer reserving the right to elect to have any alleged defective part returned to its plant for inspection before making a repair or replacement.

Only components or parts found to be defective by the Manufacturer, at its sole discretion and upon any inspection requested and performed by the Manufacturer, will either be repaired or replaced by the Manufacturer, at its sole choice.

All claims must be forwarded in writing to the Manufacturer, immediately upon discovery by owner, and must be accompanied by a copy of the proof of purchase of the original purchaser. The Manufacturer will issue a claims number and give specific instructions to be followed as to claim procedures and return of the defective part, if so requested by the Manufacturer. Owner will collaborate with the Manufacturer and its representatives to allow inspection of any alleged defective part. All shipping costs to return defective components and parts to the Manufacturer's plant are payable by owner. The cost of reshipping replacement components or parts being covered, payable by the Manufacturer.

This warranty does not cover equipment damages resulting from any other cause than a manufacturing defect in workmanship or materials, including, without limitation, damages resulting from abuse, lack of maintenance, improper handling or storage, voluntary damages, vandalism, accidental damages or damages resulting from impact or collision, damage in transit, damages caused by fire, explosion, chemical, toxic or corrosive vapors, substances or environments, water, normal corrosion and rust, storms, hail, and other acts of God, war or insurrection, acts of terrorism or other damage beyond the control of the Manufacturer. This warranty applies only to the original purchaser and is the only one applicable to the **XTIRPA™** System, and is in lieu of all other warranties, expressed or implied. Without limiting the generality of the foregoing, the Manufacturer will not be liable nor responsible for any other cost, damages or claims whatsoever, including for any special, incidental, indirect, or consequential damages whatsoever such as, but not limited to, damages for loss of profits or expected revenues, for business interruption, for personal injury, for failure to meet any duty including of good faith or of reasonable care, for negligence, and for any other pecuniary or other loss whatsoever, arising out of or in any way related to the use of or inability to use the **XTIRPA™** System, even in the event of the fault, tort (including negligence), strict liability, breach of contract or breach of warranty, even if the Manufacturer has been advised of the possibility of such damages. The Manufacturer hereby disclaims all other warranties and conditions, either express, implied or statutory, including, but not limited to, any implied warranties or conditions of merchantability, of fitness for a particular purpose or application, and of lack of negligence or lack of workmanlike effort.

IMPORTANT: The buyer must fill out and return the Limited Warranty registration form for each product.

-5-
XTIRPA™ SYSTEM DESCRIPTION

WARNING

The **XTIRPA™** System is part of a personal fall arrest, work positioning, personnel handling, material handling or rescue system for use in confined spaces. The **XTIRPA™** System is intended to act as a support structure or anchor for these uses. The user must read, understand and follow the manufacturer's instructions for each component or part of the complete **XTIRPA™** System. These instructions must be provided to the user of the **XTIRPA™** System. The user must read and understand these instructions before using the **XTIRPA™** System. The manufacturer's instructions must be followed for proper use and maintenance of the **XTIRPA™** System. Alterations or misuse of the **XTIRPA™** System or failure to follow instructions may result in serious injury or death, for which the Manufacturer disclaims all warranties and liabilities whatsoever, user, owner and purchaser of the **XTIRPA™** System waiving all claims, rights and recourses against the manufacturer and derived therefrom.

DESCRIPTIONS

POLE HOIST 1219 mm - 1829 mm (48" - 72"): IN-2337
(see illustration 1)
POLE HOIST 1440 mm – 2586 mm (57" - 102"): IN-2338
(see illustration 2)
ADJUSTABLE T-BAR LEG FOR POLE HOIST : IN-2127/IN-2256/IN-2274
(see illustration 3)
XTIRPA™ POLE HOIST SYSTEM: IN-8008
(see illustration 4)

Illustration 1: IN-2337

Illustration 2: IN-2338

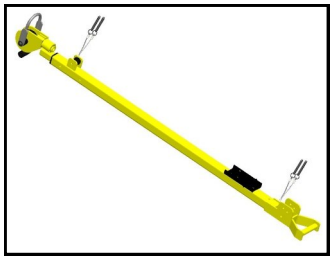

Illustration 3: IN-2127/IN-2256/IN-2274

Illustration 4: IN-8008

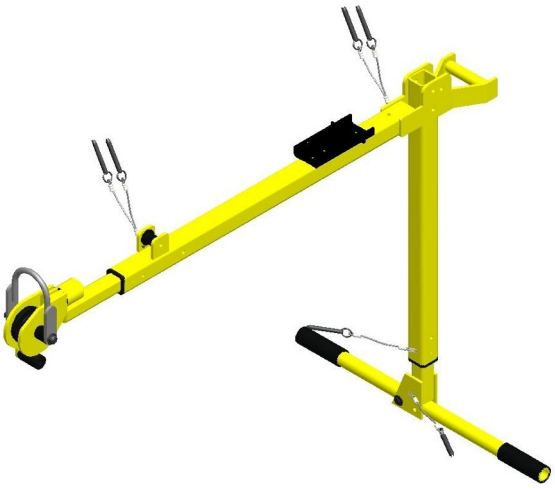

-6-
OPERATION, ASSEMBLY AND USE
XTIRPA™ SYSTEM

IN-2337/ IN-2338 Pole Hoist

IN-2127/ IN-2256/IN-2274 Adjustable T-Bar

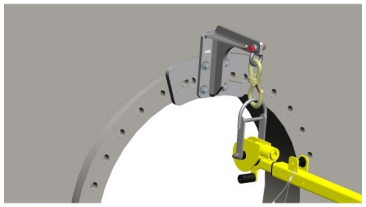

IN-2242 Lateral Entry Angle Adapter

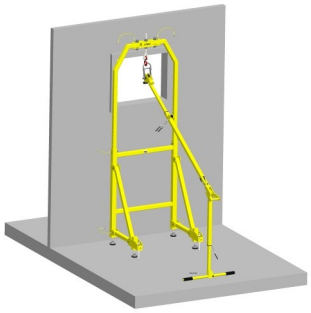

IN-2241 Lateral Entry Jib Adapter

-6-
OPERATION, ASSEMBLY AND USE XTIRPA™ SYSTEM

WARNING: The **XTIRPA™** System is part of a personal fall arrest, work positioning, personnel handling, material handling or rescue system for use in confined spaces. The **XTIRPA™** System is intended to act as a support structure or anchorage for these uses. The user must read, understand and follow the manual's instructions.

WARNING: These instructions must be provided to the user of the **XTIRPA™** System. The manufacturer's instructions must be followed for proper use and maintenance of the **XTIRPA™** System. Alterations or misuse of the **XTIRPA™** System or failure to follow instructions may result in serious injury or death, for which the manufacturer disclaims all warranties and liabilities whatsoever, user, owner and purchaser of the **XTIRPA™** System waiving all claims, rights and recourses against the manufacturer and derived therefrom.

IMPORTANT: If you have questions on the use, care or suitability of the **XTIRPA™** System for your application, please contact the manufacturer INNOVA Public Utility Products Inc.

IMPORTANT: Record the product identification information from the ID label in the maintenance and inspection log of this instruction and safety manual.

OPERATING AND ASSEMBLY OF THE POLE HOIST SYSTEM

1. Make sure that all the components and the parts are in perfect working order and that everything works correctly. Remove the pins of the pole hoist, install the T-bar and secure everything with the locking pin.

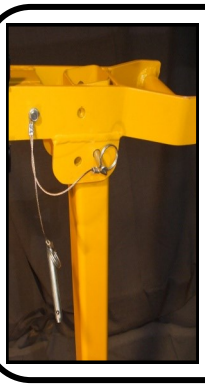

2. **A.** Choose the desired angle and lock it with the second pin.

B. Adjust the height of the pole with the T-bar and secure everything with the locking pin.

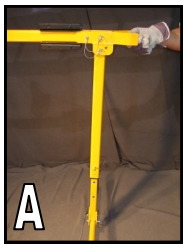

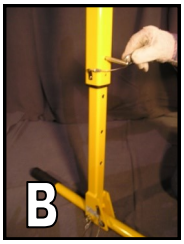

3. Install the lifeline or winch on the support of the lifting pole. Use the locking pin supplied with the support of the lifeline or the winch and lock it with the locking pin.

4. **A**. Remove the pulley from the center of the pole, cross the cable under the pulley and put back the pulley in position and secure by using the locking pin.
B. Remove the pin from the center of the pole. Stretch out and fit the pole to the wished length and secure it with the locking pin

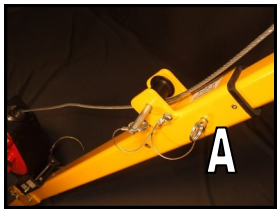

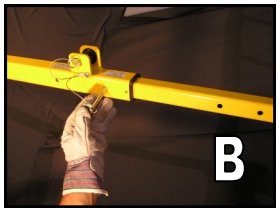

5. **A.** Rotate pull hoist swivel head in order to align slots to allow SRL cable or rope insertion.
B. Make sure that cable or rope is set between pulley and cable tensioner.

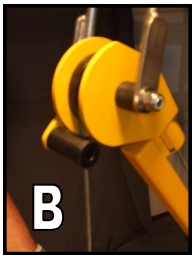

WARNING: The **XTIRPA™** System must be used only with adapters, anchors, connectors (EN 362), pulleys, other components, parts and subsystems certified, approved and recommended by the manufacturer. Substitutions or replacements made with non-approved adapters, anchors, connectors (EN 362), other components, parts or subsystems may be incompatible, and may jeopardize the safety and reliability of the complete **XTIRPA™** System and may result in serious injury or death, for which the manufacturer disclaims all warranties and liabilities whatsoever, user, owner and purchaser of the **XTIRPA™** System waiving all claims, rights and recourses against the manufacturer derived therefrom. The connectors (EN 362) (hooks, carabiners, D-rings) must be able to support a weight of at least 5000lbf (22.2kN) for ANSI, CSA, OSHA et 12kN for EN-795:2012.

6. During the installation of the lifting pole on its anchor point, make sure to take into account the requirements of the anchoring device (such as universal ring adapter, flange adapter, etc.) or the chosen structure to serve as anchor point, and in particular the required minimal resistance, suitability and positioning.

IMPORTANT: The connectors (EN 362) (hooks, carabiners, D-rings) must be able to support a weight of at least 5000lbf (22.2kN) for ANSI, CSA, OSHA and 12kN for EN-795:2012.

IMPORTANT: If you have questions on the use, care or suitability of the **XTIRPA™** System for your application, please contact the manufacturer INNOVA Public Utility Products Inc.

WARNING: It should be noted that only plates, supports and adapters that have been certified, approved and recommended by the manufacturer can be used.

WARNING: For the fall arrest systems, it is essential for safety that the anchoring device or the anchor point is always correctly positioned and that effort is made so as to reduce the risk of falls and the height of fall. It is essential that the device or the anchor point is placed above the position of the user.

WARNING: When using a fall arrest system, it is essential, for security measures, to verify the required open space underneath the user on the workplace before each use, if possible, so that in case of a fall that there is no collision with the ground or any object in the area.

IMPORTANT: If necessary, secure the work area with a manhole guard to prevent falls.

IMPORTANT: Make sure that the lifeline cable or rope is directly positioned above the working area. Only use certified lifeline cables or ropes in perfect condition, that have the appropriate specifications, including maximum lifting capacity, for the intended use of the **XTIRPA™** system.

WARNING: Any system must be immediately removed from circulation if its safety is questioned, or if it was used to stop a fall. It is imperative not to use the system before a competent person authorizes in writing the integrity of the product before its reuse.

IMPORTANT: A harness in accordance with EN 361 is the only body support device allowed to be used for fall protection.

IMPORTANT: The harness in accordance with EN 361 must be connected to the system cable or life line rope by the anchoring point of the EN 361-compliant harness.

WARNING: The manufacturer's instruction and safety manual must be followed for proper use and maintenance of this product. Alterations or misuse of the **XTIRPA™** system or failure to follow instructions may result in serious injury or death for which the manufacturer disclaims all warranties and liabilities whatsoever, user, owner and purchaser of the **XTIRPA™** system waiving all claims, rights and recourses against the manufacturer derived there from.

Keep the following instructional and safety signs clean and legible at all times.

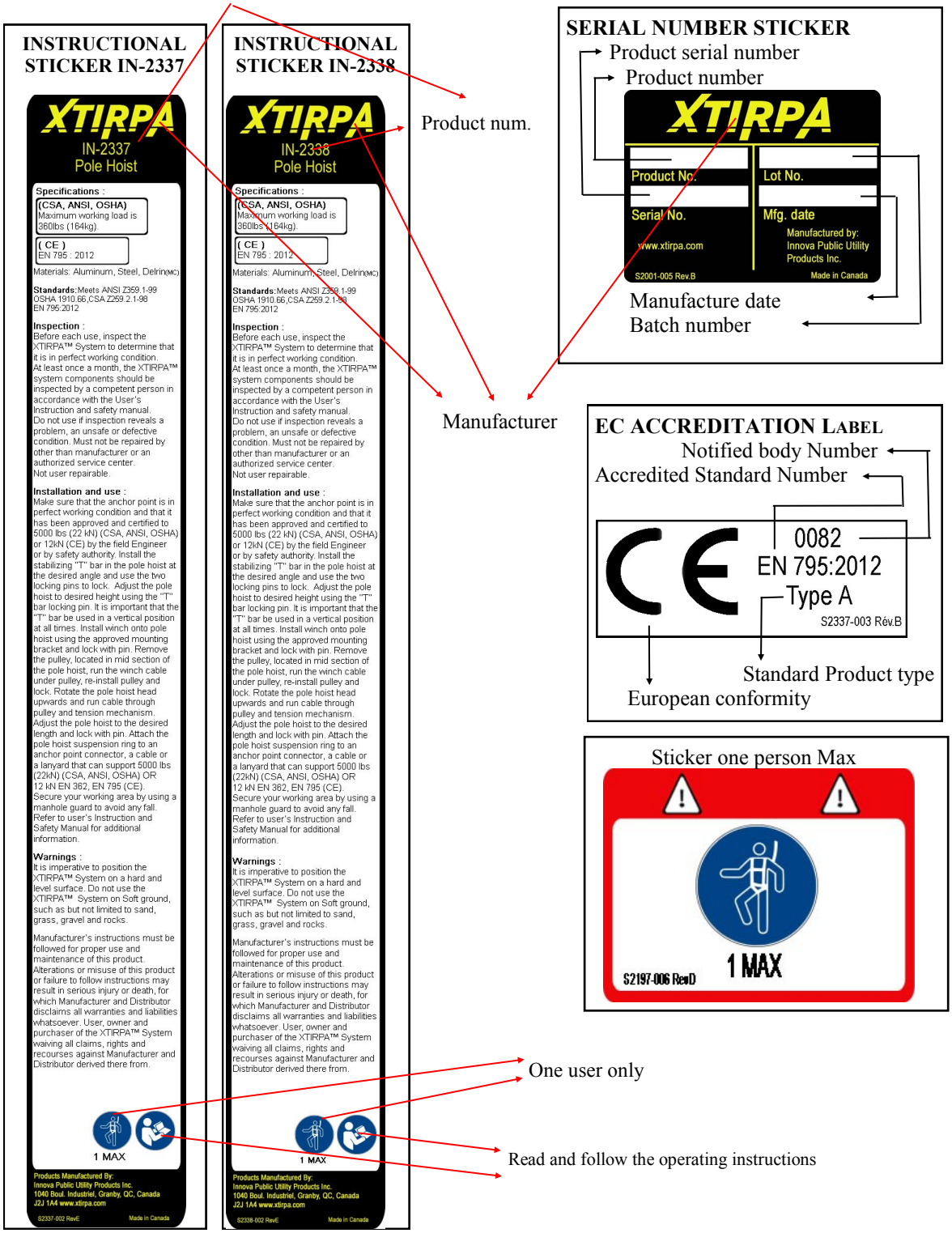

Calculation diagram

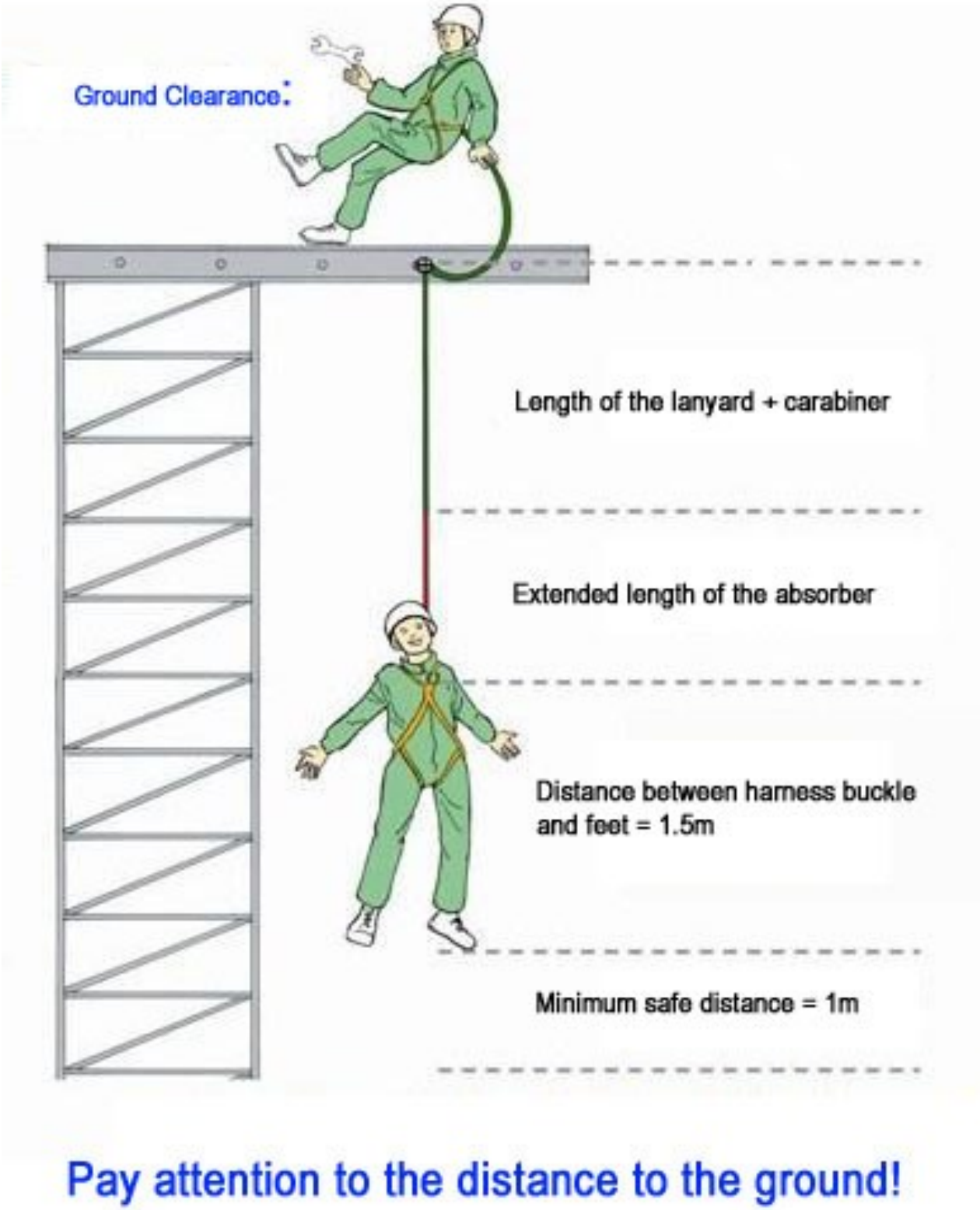

XTIRPA™

Registration Limited Warranty Form

Innova
Produits de Services Publics - Public Utility Products inc

This warranty applies only to the original purchaser and is the only one applicable to the Xtirpa System, and is in lieu of all other warranties, expressed or immplied.
The purchaser has to complete and return to INNOVA Public Utility Products Inc., all information within thirty days of purchase. Otherwise limited warranty will be void, if the product is not registered.

Register Now: **Mail or fax this registration form or visit our web site and register online.**

Mail: **INNOVA Public Utility Products Inc., 1040, boul. Industriel, Granby J2J 1A4**

Fax: **(450) 372-9936**

Web site: WWW.XTIRPA.COM

XTIRPA PRODUCT

Model number: _____ Purchasing Date: _____

Serial number: _____ Manufacturing Date: _____

CUSTOMER / USER INFORMATION

Company: _____ Phone: _____

Street Address: _____ Fax: _____

City: _____ E-Mail _____

State: _____

Zip: _____ **Do you wish to be on Innova's mailing list**

Name: _____ **for new product literature:** **Yes** □

Position: _____ **No** □

*Any failure to follow the Manufacturer's instructions contained in the Instruction and safety manual, including with regard to the inspection and maintenance of the **XTIRPA TM** system and of components and parts there of, will cause warranty to become null and void and may result in serious injury or death of the user, for which the Manufacturer disclaims all warranties and liabilities whatsoever, user, owner and purchaser of the **XTIRPA TM** system waiving all claims, rights and recourses against Manufacturer and derived there from.

Manufactured by: INNOVA Public Utility Products Inc.
1040 boul. Industriel, Granby, Québec, Canada J2J 1A4 Tél: (450) 777-1240 Fax: (450) 372-9936

XTIRPA™

MAINTENANCE AND INSPECTION LOG

Innova
Produits de Services Publics - Public Utility Products inc.

PRODUCT: _____ Purchasing Date: _____

Model number: _____ Serial number: _____ Manufacturing Date: _____

inspection: _____ Date of 1st use: _____

Inspection date:	LABELS	CORROSION	STRUCTURAL DAMAGE	WELDING	PINS & HARDWARE	OTHER (SPECIFY)	CORRECTIVE ACTION TAKEN (IF REQUIRED)	INSPECTED BY:
	☐	☐	☐	☐	☐			
	☐	☐	☐	☐	☐			
	☐	☐	☐	☐	☐			
	☐	☐	☐	☐	☐			
	☐	☐	☐	☐	☐			
	☐	☐	☐	☐	☐			
	☐	☐	☐	☐	☐			
	☐	☐	☐	☐	☐			
	☐	☐	☐	☐	☐			
	☐	☐	☐	☐	☐			
	☐	☐	☐	☐	☐			
	☐	☐	☐	☐	☐			
	☐	☐	☐	☐	☐			

COMMENTS: _____

_____

_____

*Any failure to follow the Manufacturer's instructions contained in the Instruction and safety manual, including with regard to the inspection and maintenance of the **XTIRPA TM** system and of components and parts there of, will cause warranty to become null and void and may result in serious injury or death of the user, for which the Manufacturer disclaims all warranties and liabilities whatsoever, user, owner and purchaser of the **XTIRPA TM** system waiving all claims, rights and recourses against Manufacturer and derived there from.

Manufactured by: INNOVA Public Utility Products Inc.
1040 boul. Industriel, Granby, Québec, Canada J2J 1A4 Tél: (450) 777-1240 Fax: (450) 372-9936